User Manual

CONCRETE module

EasyFix

The CONCRETE module of the EasyFix application from Rawlplug enables you to make an optimum choice of fixings for concrete substrates. The computational mechanism implemented in the module is based on ETAG 001, ETAG 020 and the latest EN 1992-4 standard. The CONRETE module contains numerous most popular shapes of fixtures as well as more than a dozen preset fixing layouts most frequently used in practice. And even more importantly, it allows you to customise both the shape and the arrangement of fixings, taking the specifics of every design job into consideration. The key features of the module include the capacity to freely move not only anchors, but also loads against the fixture's centre of gravity. Moreover, the optimisation feature makes it possible to choose the right anchor type and size quickly and easily, also by means of a number of helpful filters and sorting options. What is truly unique about the module is that it enables you to perform design jobs using REDM, i.e. the Rawlplug Engineering Design Method, being a proprietary engineering method that allows designing of even the most highly specialised fixing layouts based on results of long years of research as well as Rawlplug's expertise and experience. This means that besides calculations based on the ETAG requirements and those defined in European Technical Assessments with regard to individual products, you can also run calculations using RAD (Rawlplug Advanced Design) data.

The CONCRETE module comprises the following tabs:
Fixture, Anchors, Substrate, Loads, Results, Project details and Documents.

The Fixture tab enables users to:

Fixture

1. rotate the model and return to the initial display

2. display the drawing in the XY, YZ and XZ axis view

3. enter data on the model by clicking dimension lines

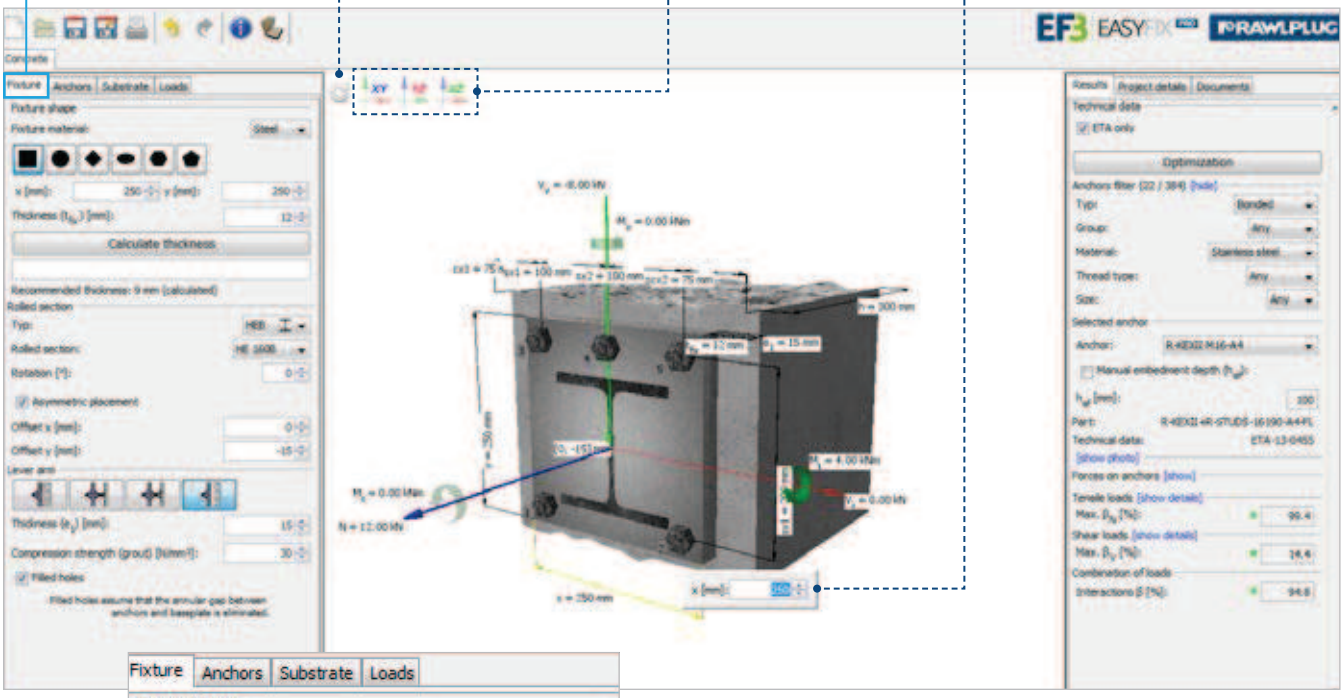

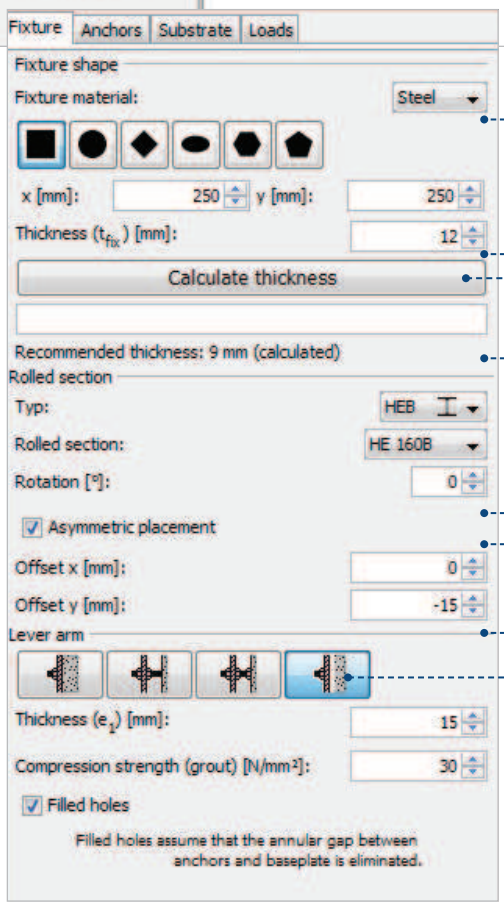

4. choose fixture parameters, such as shape or dimensions

7. position a section asymmetrically against the co-ordinate system

5. calculate fixture slab thickness, provided that a section has been added and loads defined

6. choose the section to be fixed and define its shape, size and optional rotation

8. define offset for slab fixing

Anchors tab

The following options are available from the Anchors tab:

Anchors

3. possibility to enter all dimensions on the model

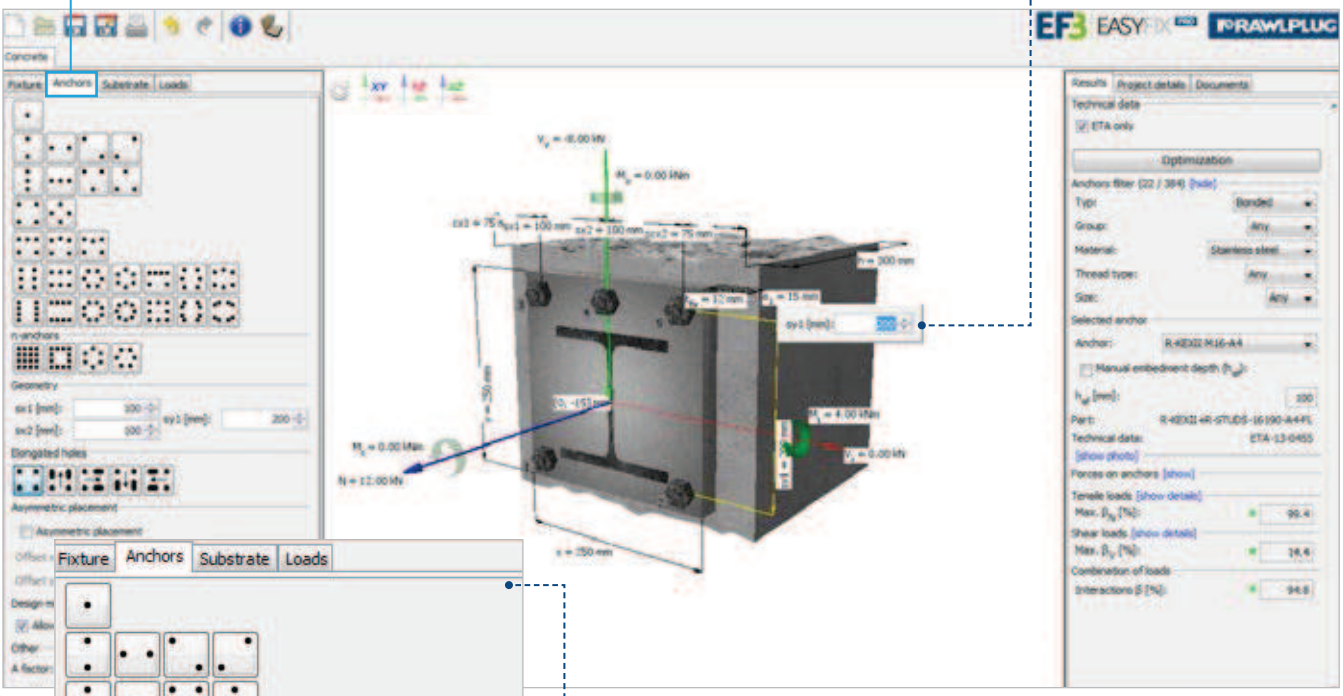

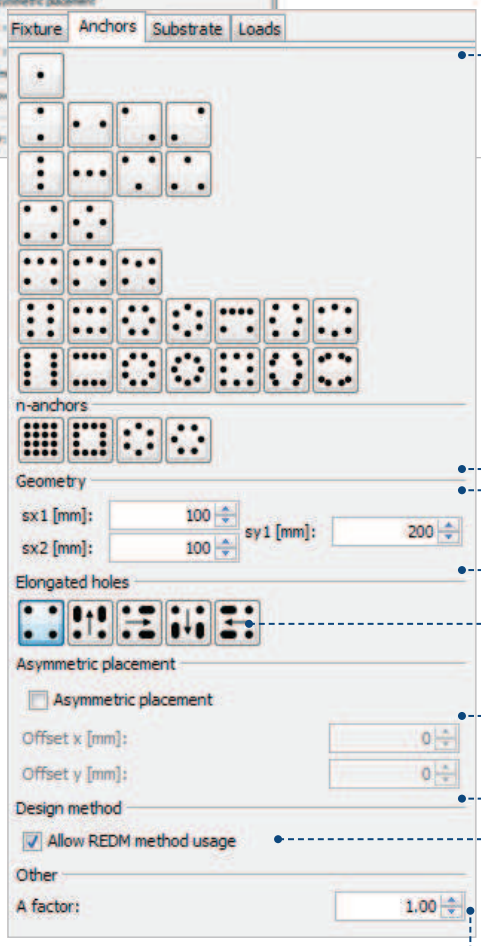

1. choice of number and arrangement of anchors

2. defining anchor spacing

4. choice of elongated holes set along the selected fixture edge

5. asymmetric placement against the fixture's centre of gravity

6. option to allow the Rawlplug Engineering Design Method (REDM) use

7. option to enter the A factor defining the distance between hole and fixture edge

x = A*d

The Substrate tab allows the user to:

Substrate

4. enter all dimensions on the model

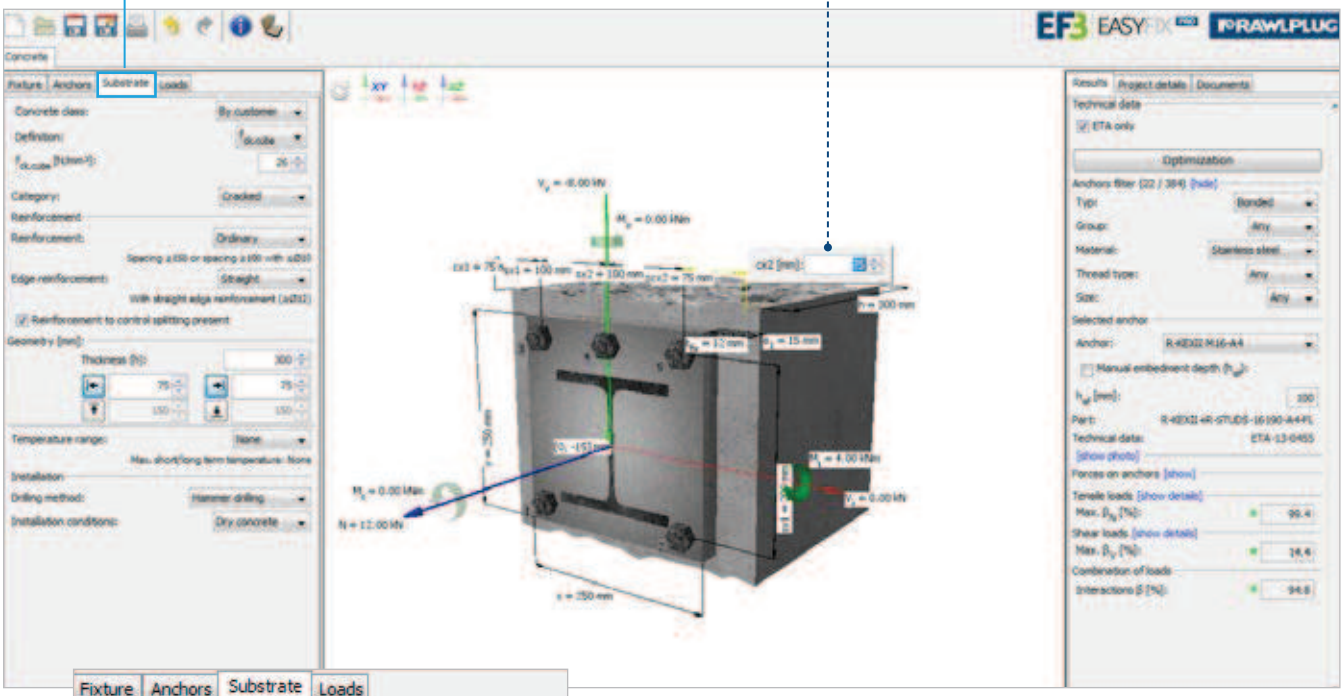

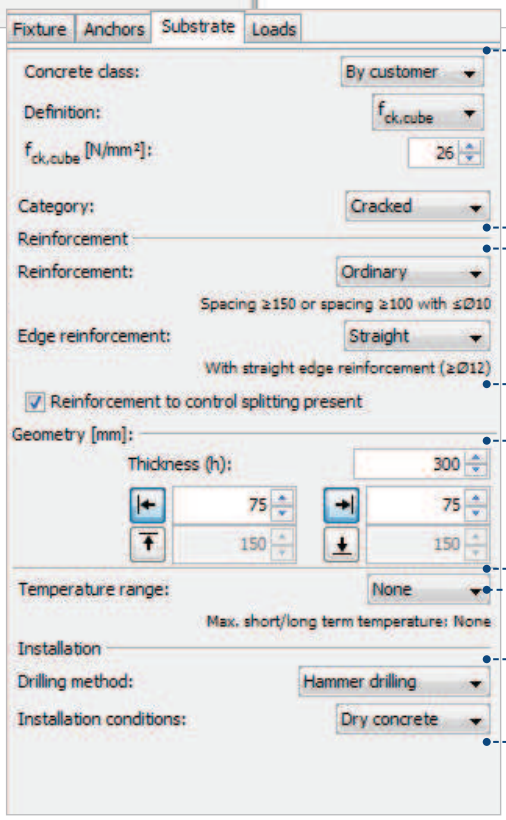

1. choose substrate type according to concrete class specified in the EC standard or define custom concrete class, as the need be, using a cylindrical or a cubical unit

2. define the existing reinforcement layout

3. define the substrate geometry for thickness and spacing between anchors and substrate edge

5. define the range of permissible operating temperatures for anchors (bonded)

6. define anchor installation parameters

Loads tab

The following options are available from the Loads tab:

Loads

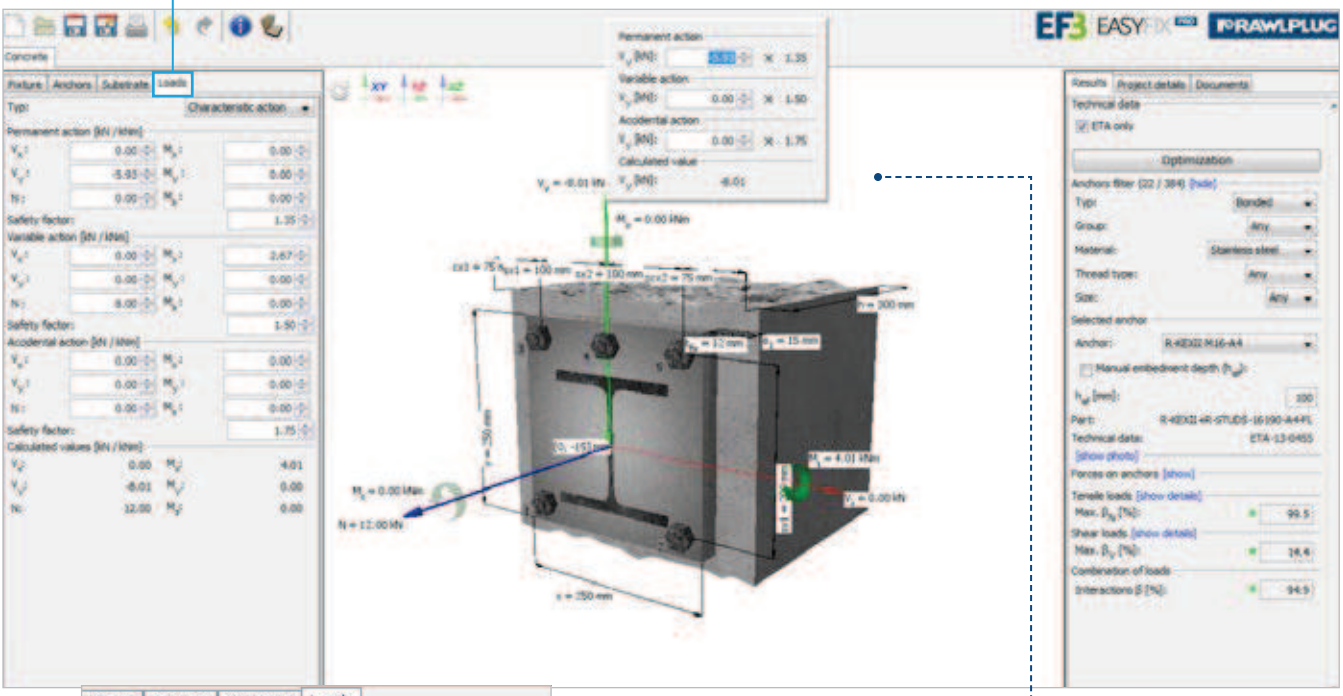

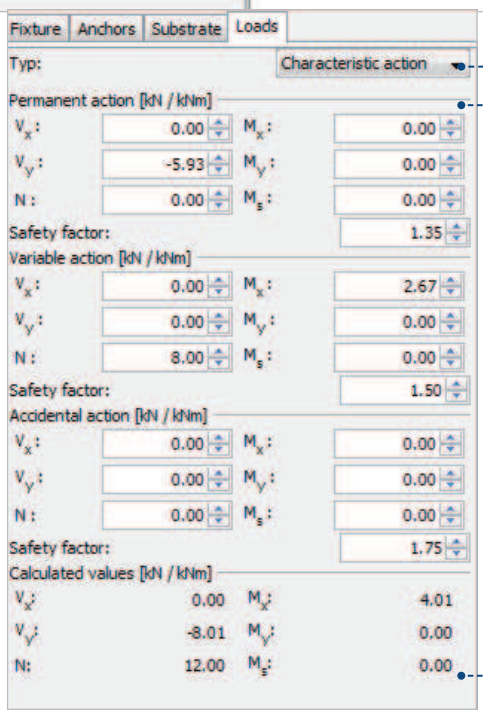

1. defining the type of loads, either characteristic or design

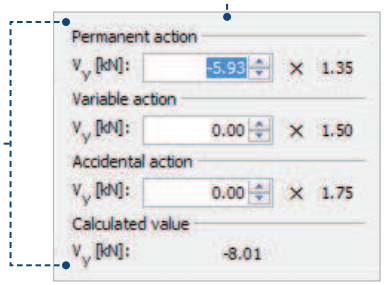

2. entering values for design and characteristic loads (including the possibility to change safety factors against applicable standards), including directly on the model

The Results tab features the following options:

Results

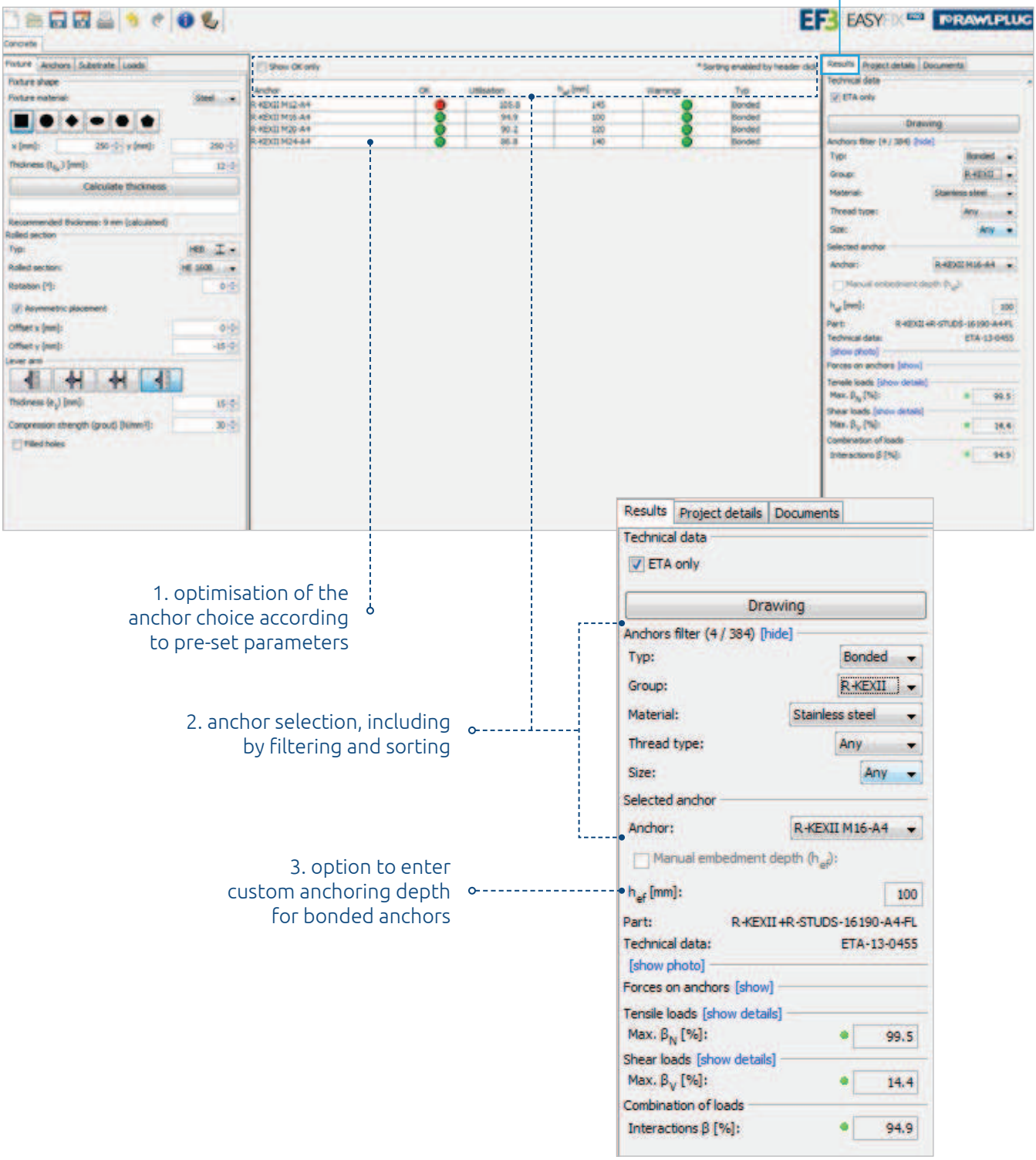

1. optimisation of the anchor choice according to pre-set parameters

2. anchor selection, including by filtering and sorting

3. option to enter custom anchoring depth for bonded anchors

Results tab

Results

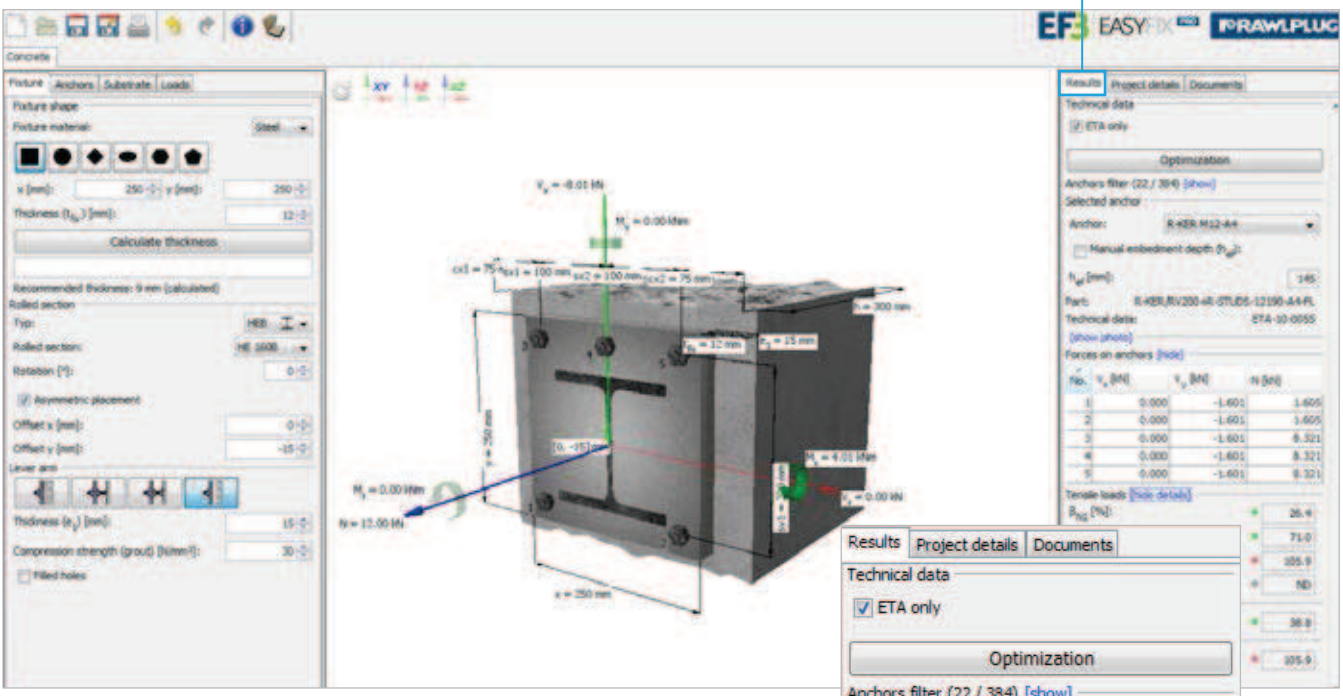

Results | Project details | Documents

Technical data

ETA only

Optimization

Anchors filter (22 / 384) [show]

Selected anchor

Anchor: R-KER M12-A4

Manual embedment depth (h_{ef}):

h_{ef} [mm]: 145

Part: R-KER/RV200+R-STUDS-12190-A4-FL

Technical data: ETA-10-0055

[show photo]

Forces on anchors [hide]

No.	V_x [kN]	V_y [kN]	N [kN]
1	0.000	-1.601	1.605
2	0.000	-1.601	1.605
3	0.000	-1.601	8.321
4	0.000	-1.601	8.321
5	0.000	-1.601	8.321

Tensile loads [hide details]

β_{N1} [%]: 26.4

β_{N2} [%]: 71.0

β_{N3} [%]: 105.9

β_{N4} [%]: ND

Shear loads [show details]

Max. β_V [%]: 38.8

Combination of loads

Interactions β [%]: 105.9

1. anchor choice and visualisation

2. displaying values of forces affecting each anchor and the neutral axis

3. displaying values of loads according to individual models of rupture

4. displaying calculation results, including identification of their correctness or error

Project Details tab

The Project Details tab allows the user to enter detailed data of the pending design project as well as of the engineering office

Project details

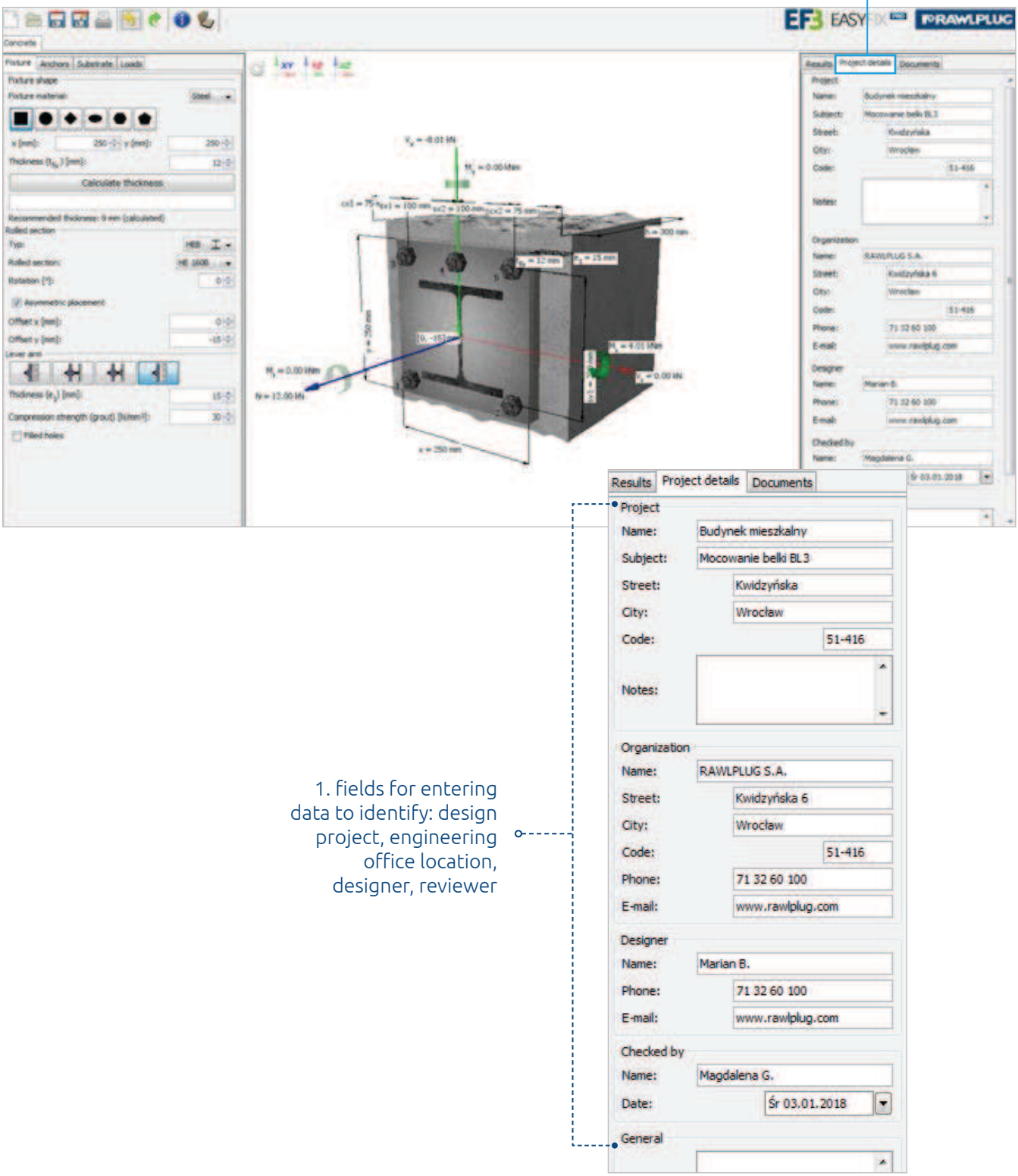

1. fields for entering data to identify: design project, engineering office location, designer, reviewer

Documents tab

The Documents tab allows the user to access a list of documents pertaining to the given fixing solution and download them.